SHARP®

ESSENTIALS SERIES COLOR DOCUMENT SYSTEMS

MX-2651
MX-3051
MX-3551
MX-4051

2019 BLI BUYERS LAB LINE OF THE YEAR

"2019 Copier MFP Line of the Year"

PANTONE® Digital Color

The New Sharp Color Essentials Series document systems deliver versatile workflow features, enhanced integration and strong value.

DESIGNED FOR THE TECHNOLOGY-DRIVEN WORKPLACE

essentials

The Sharp MX-2651, MX-3051, MX-3551, and MX-4051 Essentials Series color document systems are built using the latest technology available to deliver the performance, features and reliability needed in today's busy workplace environments. These new MFPs are also easy to use and offer enhanced productivity, all to provide customers with a seamless, intuitive experience, and the confidence in knowing their jobs will come out right the first time, every time. The new Color Essentials Series also offers leading-edge security features to help businesses protect their data and personal information.

Key Features

- **Ease of Use** – Award-winning touchscreen display offers a user-friendly graphical interface with simplified Easy Modes, integrated user guides and quick access to network services. With Sharp's new **MFP Voice** feature available for these models, you can interact with the machine with the power of natural language.

- **Productive Features** – Standard full multifunction capability out-of-box, including copying, network printing and color network scanning, combines with Sharp's Color Consistency System for long-lasting high-quality output page after page.

- **Workplace Friendly** – Integrates seamlessly with today's complex network environments, and supports popular cloud services and mobile technologies. And with Sharp's new **Application Portal** administrators can add new apps or update existing apps right from the MFP.

The new MX-2651, MX-3051, MX-3551, and MX-4051 Color Essentials Series document systems are feature-rich and offer businesses powerful multitasking features at a strong value.

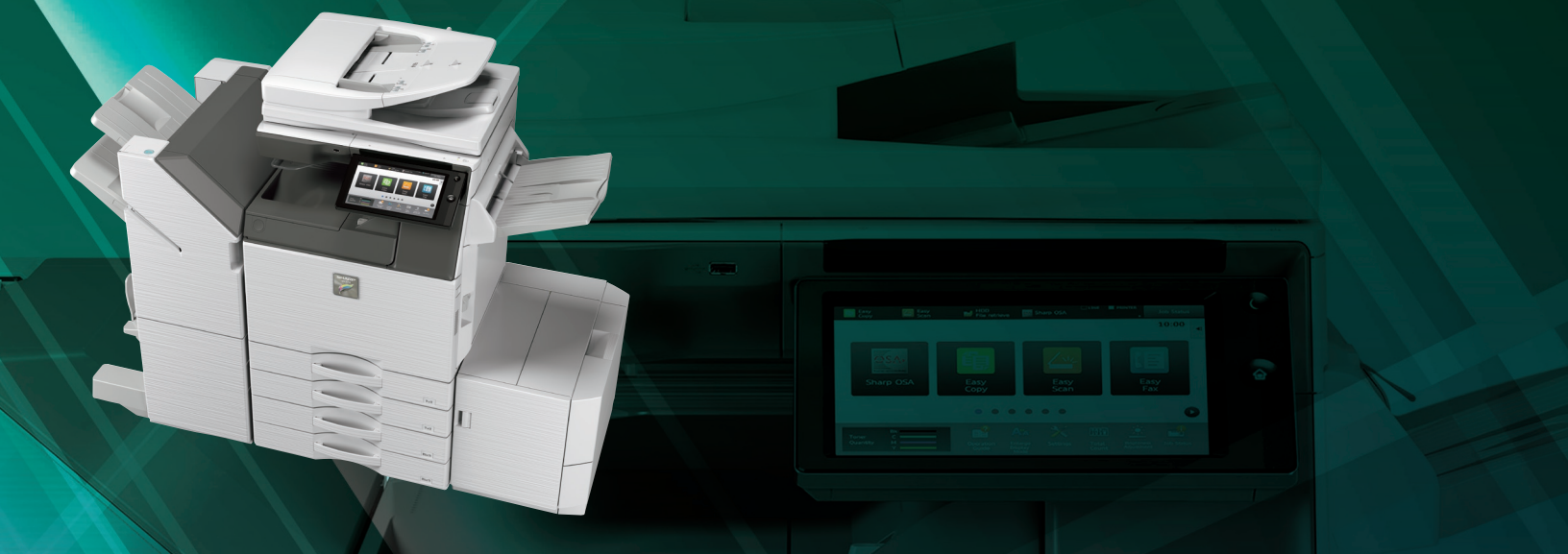

POWERFUL PERFORMANCE, STRONG PRODUCTIVITY

A feature-rich multifunction document system that is also cost-effective.

- Standard 100-sheet **reversing single-pass document feeder** scans documents at speeds up to 80 images per minute (ipm).
- **Flexible paper handling** supports media up to 110 lb. cover (300 gsm) and feeds up to 12" x 18" through the paper trays, allowing users to print on a wide variety of media, including envelopes through the standard paper tray and bypass tray.
- Sharp's new **MFP Voice** feature enables users to control the device with simple verbal commands. Experience a hands-free, voice-first interaction with **Amazon Alexa**, available for these Essentials Series models.
- Network-ready **PCL® 6** and available **Adobe® PostScript® 3™** printing systems ensure your documents print with the clarity and formatting you expect.
- With the available OCR Expansion Kit, you can easily **convert documents** to popular **Microsoft®** file formats as well as a variety of **PDF formats**. You can also add options to **Direct Print** these same file types from thumb drives, cloud applications and more.*

EASY TO USE

PRODUCTIVE FEATURES

WORKPLACE FRIENDLY

"PaceSetter Award in Ease of Use 2018–2019"

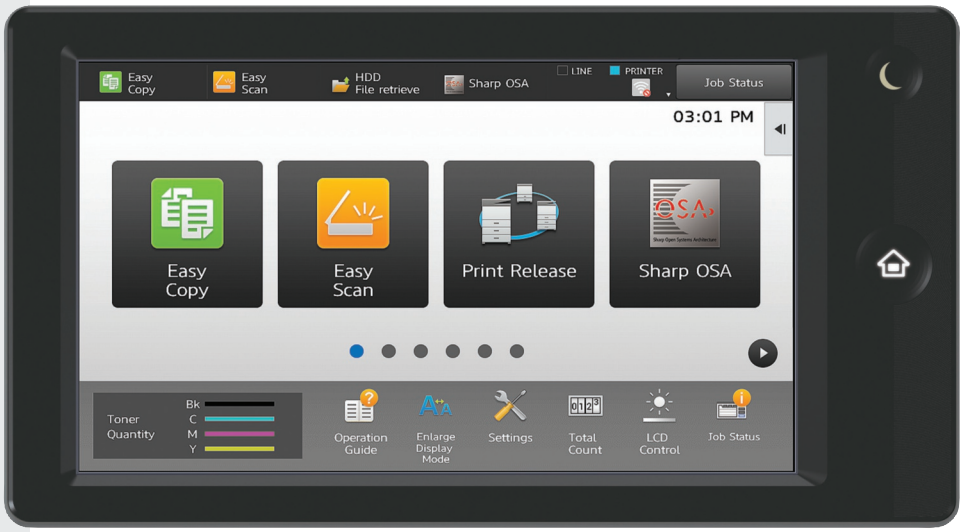

- Award-winning 10.1" (diagonally measured) **customizable touchscreen display** with a clean design enables easy access to features and functions when setting up jobs.
- Pantone Licensing on these models offers unprecedented levels of color fidelity to the **PANTONE MATCHING SYSTEM®.**
- Access popular cloud services, such as Microsoft® OneDrive™ for Business, SharePoint® Online, Google Drive™, Dropbox and more with Sharp's available **Cloud Connect** feature. And with Sharp's new **Application Portal** administrators can add or update apps right from the MFP.
- Sharp's **Color Consistency System** delivers high quality color output and helps maintain optimum image balance and toner density page after page.
- **Multi-layered, leading-edge security features** provide enhanced protection and help businesses stay one step ahead of hackers and malicious network intruders. An End-of-Lease feature can erase all data and personal information at time of trade-in.

** This function is available via Qualcomm® DirectOffice™ technology.*

ENHANCED FUNCTIONALITY – INTUITIVE DESIGN

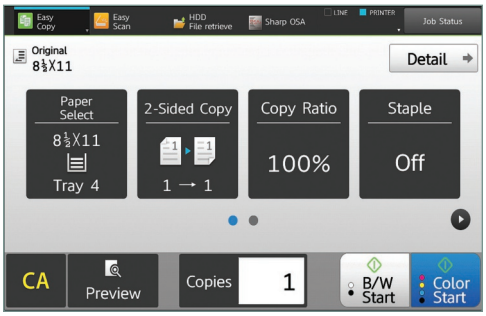

Easy Copy Screen offers the most commonly used settings.

MX-3051 shown in both a compact configuration with inner finisher and full configuration with saddle stitch finisher and large capacity cassette.

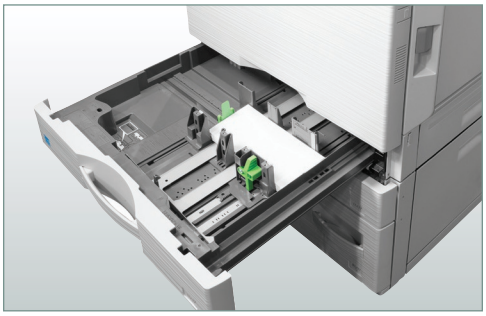

*Feeds up to 50 envelopes from the standard paper tray.**

From paper handling to networking, the MX-2651/ 3051/3551/4051 Color Essentials Series will exceed your expectations.

Simple and Intuitive Operation

From the most basic of copy functions, to the most complex scan jobs, the Color Essentials Series will perform them with ease and efficiency. Use one of the **Easy Modes** for fast, simple operation, with basic functions displayed **in large, clearly-labeled tiles** and keys. Easy Modes are available for the standard copy and scan functions, as well as for the optional fax expansion kit. And for more advanced features, just touch the "Detail" button–it's that easy.

The Productivity You Need with the Performance You Want

When it's time to get the job done, the Essentials Series color document systems are outstanding performers. Quickly scan documents at speeds up to **80 ipm**. Then use the **manual stapling feature** on select finishers to restaple your originals. **Multiple finishing options** give you the output you require, be it stacked, stapled, or saddle-stitched. There's even an available built-in **stapleless finishing** feature, which can bind up to five sheets of paper by adding a crimp to the corner of the set, saving regular staples for larger sets. These models also feed up to 50 envelopes from the standard paper tray.*

Experience Hands-free, Voice-first Interaction at the MFP with Alexa

Sharp has always been known for enhancing MFP productivity in the workplace by offering innovative, easy-to-use features. Sharp has done it again with the new **MFP Voice feature** available for the new Color Essentials Series document systems. With Sharp's MFP Voice feature, you can interact with the machine just by using the power of natural language. With simple voice commands, you can ask the Sharp document system to make copies or scan a document.

MX-4051 shown with available Sharp MFP Voice feature with Alexa.

** See specifications for a list of supported envelopes.*

HIGH IMPACT VERSATILITY AND SCALABILITY

The MX-2651/3051/3551/4051 Essentials Series color document systems provide high-performance functionality that easily adapts to your business needs.

innovative features

Reversing Single Pass Feeder (RSPF)
Standard 100-sheet reversing document feeder scans up to 80 ipm.

Convenient Wireless Networking
Scanning and printing from mobile devices is made quick and easy with the available Sharpdesk Mobile App.

Easy-to-Use Smart Touchscreen
Award-winning, tablet-style menu provides quick access to features and functions.

High Quality Printing
600 x 600 dpi resolution produces razor-sharp documents. Available Adobe PostScript 3 drivers offer extensive job control.

In-line Stapling
Produce professional-looking corner-staple or edge-staple documents up to 65 pages.

Hands-free Operation
The available MFP Voice feature enables users to control the device using simple verbal commands with Alexa.

Manual Stapler
Manual stapling feature makes it easy to re-staple originals after scanning.

Easily Access Popular Cloud Applications
With the available Cloud Connect feature, users gain access to Microsoft OneDrive, Google Drive, Dropbox and more. Sharp's new Application Portal will make it easy for administrators to add or update apps right from the MFP.

Saddle Stitch Finishers
Make high quality booklets up to 80 pages.

Multi-layered Security Features
Leading-edge security features provide enhanced protection of data and personal information and helps protect against network intrusions.

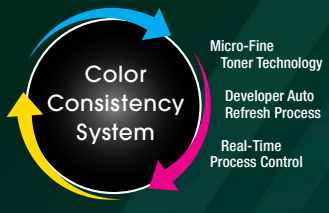

Sharp's Color Consistency System combines Micro-fine Toner with Developer Refresh and advanced Image Process Control. These processes help ensure color output is always at peak performance.

Advanced Finishing
Sharp gives you a choice of five high-performance finishers to give your documents a professional look. Choose from a compact inner finisher to a high capacity, floor-standing saddle stitch finisher.

Flexible Paper Handling
Paper drawers feed up to 12" x 18" and support media up to 300 gsm. Also feeds up to 50 envelopes through the standard paper tray.*
A variety of paper tray options are available, including a large capacity cassette and split tandem paper drawers for a total on-line capacity of 6,300 sheets.

** See specifications for a list of supported envelopes.*

ENHANCED COLLABORATION FOR STREAMLINED WORKFLOWS

Access popular cloud applications, distribute files and print documents more easily.

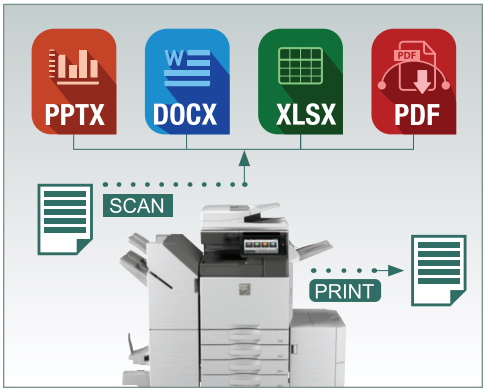

Scan and convert documents to popular file types with optional OCR Expansion Kit.

Standard Serverless Print Release enables users to securely print a job and release it from up to six supported models on the same network.

Expandable workflow solutions that can grow as your business needs change.

Distribute, Access and Print Your Documents with Ease

Sharp makes it easy to go beyond traditional network scanning with optional **Email Connect** and **Cloud Connect** features. With Email Connect, scan to email is seamlessly integrated with Microsoft Exchange/Office 365® and Gmail™ user accounts, making it easy to identify the sender of scanned files. With Cloud Connect, users can easily scan-to and print-from **Microsoft OneDrive for Business, SharePoint Online, Google Drive, Box and Dropbox**. And with Sharp's new Application Portal, administrators will be able to easily add new apps and update existing apps right from the MFP touchscreen panel.

Scan and Print Files Easily from Mobile Devices

The Essentials Series color document systems also make it easy to scan and print files from tablets and smart phones using **Sharpdesk Mobile**, a free downloadable app available for most mobile devices.[1] These new models also support popular mobile technologies such as **Apple® Airprint® and Android™ print framework**. With optional **wireless networking**, users can also print directly to the MFP from mobile devices without interfering with the corporate network![2]

Simplify Managing Different File Types with Intelligent Image Processing

With the optional OCR Expansion Kit, users can easily scan and convert documents to popular file formats including Microsoft Word, PowerPoint® and Excel®, as well as Searchable PDF, Encrypted PDF and others. You can even add additional options to directly print these same file types from thumb drives, cloud applications and mobile devices. This function is enabled via Qualcomm DirectOffice technology. The available PostScript 3 Expansion Kit supports the new **Adobe Embedded Print Engine**, which direct prints PDF files with greater accuracy and performance.

Flexible Printing Solutions Help Maximize Productivity

Standard PCL 6 and optional Adobe PostScript 3 printing systems to help you speed through all of your output needs. Sharp's **Serverless Print Release** feature enables users to securely print a job and release it from up to six supported models on your network.[1]

Simplify Complex Business Workflows with Sharp OSA® technology

Sharp OSA technology can help your business leverage the power of your network applications, back-end systems and cloud services.[2] Easily automate complex processes and help eliminate redundant tasks. Talk to your authorized Sharp dealer to see how they can help you implement a streamlined workflow solution.

OSA®
Sharp Open Systems Architecture

[1] *Go to www.sharpusa.com for a list of supported equipment and operating systems.*
[2] *Some features require optional equipment and/or software.*

TAKING CARE OF BUSINESS SAFELY AND SECURELY

Manage your device, help safeguard your data, help protect your business.

To help protect employees' privacy and intellectual property, the new Color Essentials Series is armed with leading-edge, **multi-layered security features**, including **Firmware Attack Prevention and Self Recovery**, which can help identify a malicious intrusion and restore the machine firmware to its original state. The new **Whitelisting** feature detects access attempts to the machine file system and denies access if the source data is not on the white list. **Authority Groups** help manage and restrict copying, printing and scanning features to safeguard data and control costs. Administrators can also apply **Active Directory® Group Policy** to the device, which offers centralized configuration and control. **Confidential Printing** helps ensure sensitive documents are kept safe by requiring users to enter a PIN code to print them. These models also support Active Directory user authentication and secure **Single Sign-On**. **Integrated ID card authentication** is also available.* When you are ready to trade the machine in, a convenient **End-of-Lease** feature can erase all data and personal information, as well as print a confirmation report.

These scalable security offerings aim to help protect your confidential and personal information, as well as help your business meet regulatory requirements. For additional information visit: *www.sharpusa.com/security*.

** Some features require optional equipment and/or software.*

With **Sharp Remote Device Manager (SRDM)**, administrators can take control of system features and simplify installation and management. SRDM makes it easy to view service logs, click counts, history reports and more. Event-driven service alerts help monitor the device and maximize uptime. The centrally managed **security dashboard** monitors security settings and can automatically reset the security policy if changed locally at the machine. Also, **Centralized Admin Password Management** and **Centralized Power Management** make it easy to deploy changes when needed. The **Remote Front Panel** feature enables administrators to control the machine's LCD panel from a PC to troubleshoot issues and train operators. Sharp also offers both **built-in** and additional **auditing hardware and software to control, access and track usage** of each device on the network.* And with **My Sharp™**, you get a dedicated training website customized to your Essentials Series model to help you understand all of the features.

ENVIRONMENTAL COMMITMENT

An Environmentally Responsible Approach to Product Design

Sharp is committed to environmental sustainability and corporate responsibility including planning, design, manufacturing, distribution and product end-of-life management. The color Essentials Series adhere to Sharp's Green Products Guidelines in pursuit of these commitments. These guidelines include designing products that consume less power, using recycled materials, reducing the amount of material used in products and packaging, and labeling the type of materials used. Sharp also aims to design products that are upgradable, easy to repair and easy to take apart for recycling.

The MX-2651/3051/3551/4051 document systems are ENERGY STAR® qualified and RoHS compliant to restrict the use of hazardous substances. These products also have low TEC values. Sharp MFPs are EPEAT® registered.

Toner Recycling Program

As part of our commitment to help preserve the environment, Sharp offers zero-waste-to-landfill recycling for Sharp consumables at no cost to our customers. This program includes cartridges, bottles, toner collection containers and drum units. Sharp encourages customers to recycle their used Sharp toner cartridges in bulk by providing them with a pre-paid recycling kit for their return to our facility.

Environmental Leadership

As a testament to our commitment to the environment, Sharp is a multi-year winner of the ENERGY STAR annual Excellence in Energy Proficiency Product Design. Sharp is also a multi-year winner of the SmartWay® Excellence Award which recognizes companies for conserving energy and lowering greenhouse gas emissions in logistics and transportation.

For more information about Sharp's environmental leadership including information about energy efficient products, electronics or toner cartridge recycling, please visit *www.sharpusa.com/environment*.

MX-2651/3051/3551/4051 SPECIFICATIONS

Main Specifications

MX-2651/3051/3551/4051	Base models include multitasking controller, 100-sheet RSPF and PCL 6 printing system, network scanning, auto duplexing, 1 x 550-sheet paper drawer, 100-sheet bypass tray. Black and color developer is included.
Type	Color multi-function digital document system
Display	10.1" (diagonally measured) color dot matrix high-resolution touch panel tilting display. 1,024 x 600 dots (W-SVGA)
Functions	Copy, print, network print, network scan, document filing and fax[1]
Copy System	Dry electrostatic transfer/Dual component developer/Magnetic brush development/OPC drums/Belt fusing/white LED exposure
Originals	Sheets and bound documents
Max. Original Size	11" x 17"
Output Size	Min. 5½" x 8½", Max. 12" x 18"
Copy Speed	26/30/35/40 ppm Mono/Color (8½" x 11")
Multiple Copy	Max. 9,999 copies
First Copy Time (In Seconds)[2]	Platen Glass: Mono 4.7, Color 6.7 RSPF: Mono 7.6, Color 9.7
Warm Up Time	33 seconds (from main power switch on), 20 seconds (from [Power] button on)
Magnification	25% to 400% in 1% increments (with RSPF 25%-200%)
Original Feed	100-sheet RSPF with original size detection.
Scan Speed	Copy: Up to 80 ipm (Mono)/53 ipm (Color) Scan: Up to 80 ipm (Mono/Color)
Original Sizes	5½" x 8½", 8½" x 11", 8½" x 11" R, 8½" x 14", 11" x 17"
Paper Capacity	Standard: 650 Sheets/Maximum: 6,300 Sheets
Paper Feed System	Standard: (1) paper drawer 550 sheets (letter/legal/ledger/stmt. size) or up to 50 envelopes (max. height: 25 mm), 100-sheet (or 20 envelope) bypass tray. Optional: Single, double, or triple paper drawer(s) (550, 1,100, or 1,650 sheets), split tandem paper drawers 2,100 sheets (letter) + (1) 550-sheet paper drawer (letter/legal/ledger/ statement size).
Paper Weights and Types	Paper drawers: 18 lb. bond to 110 lb. cover. Drawer 1: 20-24 lb. bond or Monarch/Com-9 envelopes. Split Tandem Drawers: 18 lb. bond to 28 lb. bond or plain, pre-printed, recycled, pre-punched, letterhead and color paper. Bypass tray: 16-28 lb. bond (plain paper), 13-16 lb. bond (thin paper), 28 lb. bond-110 lb. cover (heavy paper), tab paper (letter) and Monarch/Com-10 envelopes. Also label, gloss, preprinted, recycled, pre-punched, letterhead and color paper or OHP film.
Duplexing	Standard automatic duplex copying and printing
CPU	Up to 1.4 GHz multi-processor design
Interface	10/100/1000 Base-T Ethernet, USB 2.0: 2 host ports (front & rear), 1 available device port (rear), opt. wireless 802.11 b/g/n
Memory	Standard 5 GB copy/print (shared)
Hard Disk Drive	500 GB
Copy Resolution	Scan: 600 x 600 dpi (Mono/Color) Output: Up to 600 x 600 dpi
Color Modes	Auto Color Selection (ACS), Full Color Mode, Monochrome (B/W)
Exposure Control Modes	Automatic, Text, Text/Photo, Text/Printed-Photo, Printed-Photo, Photo, Map, Pale-Color Document Settings: Auto or 9 step manual
Halftone	256 gradations/2 levels (monochrome)
Copy Features	Scan-Once Print-Many, electronic sorting, offset-stacking, Auto Color Selection (ACS), Auto Paper Selection (APS), Auto Magnification Selection (AMS), Auto Tray Switching (ATS), black-white reversal, blank page skip, book copy, book divide, card shot, center erase, centering, cover pages, dual page copy, edge erase, image edit, image preview, insert pages, job build, job programs, margin shift, mirror image, mixed size original, multi-page enlargement, original count, pamphlet style, proof copy, repeat layout, reserve copy, rotated copy, stamp, stamp custom image, suppress background, tab copy, tab-paper insertion, tandem copy, toner save mode, transparency inserts, watermark, 2-in-1 / 4-in-1 / 8-in-1 multi shot
Account Control	Up to 1,000 users. Supports user-number authentication via local, LDAP, and Active Directory for copy, print, scan and document management

Main Specifications *(continued)*

Output Tray Capacity	Center Exit Tray (Main): 250 sheets (face down) Job Separator (Upper Tray): 100 sheets (face down) Right Side Exit Tray: 100 sheets (face down)
Cloud Supported Services (Option)	Google Drive, Box, OneDrive for Business, SharePoint Online, Dropbox, Office 365, Gmail
Network Protocols	TCP/IP (IPv4, IPv6, IPsec), HTTP/HTTPS, IPP/IPP-SSL, FTP/FTPS, SNMPv3, SMTP/SMTP-SSL, POP3/POP3-SSL, LDAP/LDAP-SSL, 802.1x for Windows and Unix.
Network and Data Security	Includes IP/MAC address filtering, protocol filtering, port control, user authentication (local/LDAP/Active Directory), TLS Encryption, Kerberos support
Firmware Management	Flash ROM with local (USB), network update capability and firmware update 1 to N with SRDM (Sharp Remote Device Manager)
Device Setup	Web-based management with user/admin level login
Service/Functions	Remote Front Panel, remote access to service logs and click counts
Accessibility Features	Free stop tilting front panel, adjustment of key touch sound and speed, concave key, document feeder free stop, job programs, remote front panel, universal grip for paper trays, and disable screen timeout
Environmental Standards	International Energy Star Program Ver. 2.0, European RoHS, Blue Angel (RAL-UZ205)
Power Source	110-127 V AC, 60 HZ, 15 A Receptacle
Power Consumption	1.5 kW or less
Weight	Approx. 173 lbs.
Dimensions	Approx. 24" (w) x 26" (d) 33" (h)

Network Printing System

PDL	Standard PCL 6, optional Adobe PostScript 3
Resolution	600 x 600 dpi
Print Speed	26/30/35/40 pages per minute (8½" x 11")
Print Drivers	Windows® 7, Windows 8.1, Windows 10, WindowsServer® 2008, Windows Server 2012, Windows Server 2016, Windows PPD, Mac® OS X® (including 10.6 to 10.14), all Mac PPD, UNIX®, Linux®, Universal Print (requires Microsoft connector)
Mobile Printing[1]	Android printing framework (Sharp Print Service Plugin), Sharpdesk® Mobile
Print Features	Auto configuration, serverless print release, chapter inserts, confidential print, continuous printing, custom image registration, document control, document filing, duplex printing, electronic sorting, form overlay, hidden pattern print, image rotation, job bypass print, job retention, layout print, margin shift, multiple pamphlet, network tandem print, N-up printing, offset stacking, page interleave, pamphlet style, poster print, proof print, print and send, tab paper print, tab printing, transparency inserts, tray status, user authentication single sign-on, watermarks, zoom print
Direct Printing	File Types: TIFF, JPEG, PCL, PRN, TXT, and PNG. Optional: PDF, Compact PDF, Encrypted PDF, PS, DOCX, XLSX and PPTX. Methods: FTP, SMB, Web page, Email and USB memory. PDF file formats support the Adobe Embedded Print Engine
Resident Fonts	80 outline fonts (PCL), 139 fonts (PS) (Host)
Interface	RJ-45 Ethernet 10/100/1000 Base-T, USB 2.0, Wireless
Operating Systems and Environments	Windows 7, Windows 8, Windows 10, Windows Server 2008, Windows Server 2012, Windows Server 2016, Chrome®, Mac OS X10.6-10.14, Unix®, Linux®, Citrix®, and SAP device types[1]
Printing Protocols	LPR, IPP, IPPS, Raw TCP (port 9100), FTP, POP3, POP3S, HTTP, HTTPS, and LPR and LPD for Unix

Network Scanning System

Scan Modes	Standard: Color, monochrome, grayscale
Max. Original Size	11" x 17"
Optical Resolution	600 dpi
Output Modes	600 dpi, 400 dpi, 300 dpi, 200 dpi, 150 dpi, 100 dpi
Image Compression	Monochrome Scanning: Uncompressed, G3 (MH), G4 (MR/MMR) Color/Grayscale: JPEG (high, middle, low) Internet Fax mode: MH/MMR (option)[1]

Network Scanning System *(continued)*

Image Formats	Monochrome: TIFF, PDF, PDF/A, Encrypted PDF, and XPS Color/Grayscale: TIFF, JPEG, PDF, PDF/A, Compact PDF, Encrypted PDF, and XPS. Internet Fax: TIFF-FX, TIFF-F, and TIFF-S
Scan Destinations	Email, Desktop, FTP, Folder (SMB), USB, Internet fax (option), Super G3 fax (option)
One-touch Destinations	Up to 2,000 (combined scan destinations)
Group Destinations	Up to 500
Programs	48 (combined)
Max. Jobs	Up to 100
Enhanced Email Integration	Standard Gmail connector, standard Exchange connector
Software[1]	Sharpdesk personal document management software, Network Scanner tool, Sharpdesk Mobile (download)

Optional Equipment

MX-60ABD	Deluxe Copier Cabinet Base (with front door)
MX-DE25N	Stand/1 x 550-sheet Paper Drawer
MX-DE26N	Stand/2 x 550-sheet Paper Drawers
MX-DE27N	Stand/3 x 550-sheet Paper Drawers
MX-DE28N	Stand/1 x 550 + 2,100-sheet Split Tandem Paper Drawers
MX-DE29N	Low Stand/1 x 550-sheet Paper Drawer
MX-LC17N	3,000-sheet Large Capacity Cassette (letter, requires MX-DE25N/26N/27N/28N)
MX-LT10	Long Paper Feeding Tray
MX-FN27N	50-sheet Staple Inner Finisher
MX-FN28	1K Stacking 50-sheet Staple Finisher
MX-FN29	1K Stacking 50-sheet Staple/Saddle Stitch Finisher
MX-FN30	3K Stacking 65-sheet Staple Finisher
MX-FN31	3K Stacking 65-sheet Staple/Saddle Stitch Finisher
MX-RB25N	Paper Pass Unit (required for MX-FN28/29/30/31)
MX-PN14B	3-Hole Punch Unit (requires MX-FN27N)
MX-PN15B	3-Hole Punch Unit (requires MX-FN28/29)
MX-PN16B	3-Hole Punch Unit (requires MX-FN30/31)
MX-SCX1	Staple Cartridge for MX-FN27N/28
AR-SC2	Saddle-stitch Staple Cartridge for MX-FN29
MX-SC11	Staple Cartridge for MX-FN30/31
MX-SC12	Saddle-stitch Staple Cartridge for MX-FN31
MX-TR19N	Right Side Exit Tray
MX-TR20	Job Separator Tray
MX-TU16	Center Exit Tray
MX-UT10	Utility Table
MX-EB18	Wireless LAN
MX-EB19L	Compact PDF Kit
MX-EB20L	OCR Expansion Kit
MX-FX15	Fax Expansion Kit
MX-FWX1L	Internet Fax Kit
MX-PF10	Bar Code Font Kit
MX-PK13L	Adobe PostScript 3 Expansion Kit
MX-PU10L	Direct Print Expansion Kit
AR-SU1	Stamp Unit (requires AR-SV1 Stamp Cartridge)
AR-SV1	Stamp Cartridge
MX-AMX1L	Application Integration Module
MX-AMX2L	Application Communication Module
MX-AMX3L	External Accounting Module
MX-FR62U	Data Security Kit
DVENDFSV	Generic Vendor Interface Kit

Supplies

MX-61NTBA	Black Toner Cartridge
MX-61NTCA	Cyan Toner Cartridge
MX-61NTMA	Magenta Toner Cartridge
MX-61NTYA	Yellow Toner Cartridge
MX-61NVBA	Black Developer
MX-61NVSA	Cyan/Magenta/Yellow Developer
MX-60NRSA	Drum

[1] Some features require optional equipment. See your local dealer.

[2] May vary depending on product configuration, machine settings and operating and/or environmental conditions.

OSA® Sharp Open Systems Architecture

Qualcomm® DirectOffice™

Works with Apple AirPrint

epeat GOLD

ENERGY STAR

SHARP®

Sharp, Sharp OSA, Sharpdesk, My Sharp, and all related trademarks are trademarks or registered trademarks of Sharp Corporation and/or its affiliated companies. Microsoft, Office 365, Active Directory, Windows, Windows Server, Excel, PowerPoint, OneDrive, and SharePoint are trademarks or registered trademarks of Microsoft Corporation. Android, Chrome, Gmail, Google Drive and Chromebook are trademarks or registered trademarks of Google LLC. Adobe, the Adobe logo, PostScript, and PostScript 3 are either registered trademarks or trademarks of Adobe in the United States and/or other countries. Qualcomm DirectOffice is a product of Qualcomm Technologies, Inc. and/or its subsidiaries. Qualcomm is a trademark of Qualcomm Incorporated, registered in the United States and other countries. DirectOffice is a trademark of CSR Imaging US, LP, registered in the United States and other countries, used with permission. Amazon, Alexa, and all related logos and motion marks are trademarks of Amazon.com, Inc. or its affiliates. All other trademarks are the property of their respective owners. Design and specifications subject to change without notice.

©2021 Sharp Electronics Corporation. All rights reserved.

Pulse Technology
(888) 357-4277

PULSE TECHNOLOGY